PROPOSED REMODELING FOR

COMMERCIAL AND RESIDENTIAL BUILDING

38-40 Broad Street, Keyport, NJ 07735, USA

BLOCK: 21.01 LOT: 59



EXISTING BUILDING

ZONING INFORMATION



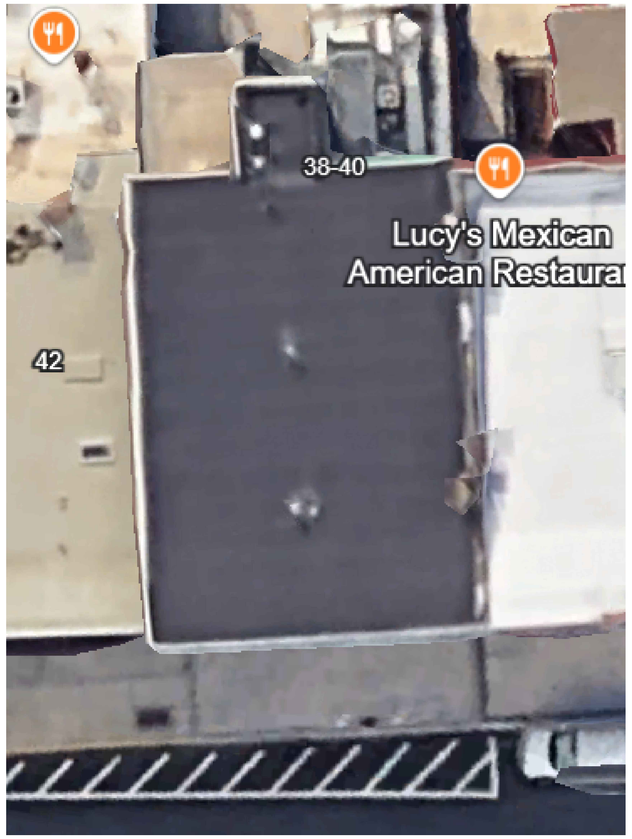

EXISTING

1 SITE PLAN

SCALE :N.T.S.

BUILDING CODE ANALYSIS	APPLICABLE CODES AND REFERENCES
Interntional Residential Code- New Jersey Edition 2021 ADA ICC/ANSE A117.1-2017 New Jersey Uniform Construction code- Rehabilitation Sub code 2021 National Standard Plumbing Code 2021 International Energy Conservation Code 2021 International Mechanical Code 2021 International Fuel Gas Code 2021	1. INTERNATIONAL BUILDING CODE :NJ. ED. 2021 (NJAC 5:23-3.14) 2. INTERNATIONAL RESIDENTIAL CODE -NJ. ED 2021 3. INTERNATIONAL FIRE CODE 2021 (ICC/ANSI A117.1-2021) 4. INTERNATIONAL MECHANICAL CODE, 2021 (NJAC 5:23-3.20) 5. INTERNATIONAL FUEL GAS CODE, 2021 (NJAC 5:23-3.22) 6. INTERNATIONAL ENERGY SUB CODE (NJAC 5:23-3.18) ENERGY CONSERVATION CODE, 2021 (RESIDENTIAL) ASHRAE 90.0-2022 (COMMERCIAL) 7. NATIONAL ELECTRICAL CODE, (NFPA 70)/2023 (N.J.A.C. 5:23-3.16) 8. NATIONAL STANDARD PLUMBING CODE 2021 (N.J.A.C. 5:23-3.15) 9. REHABILITATION SUB CODE (NJAC 5:23-6) NJUCC SUBCHAPTER 6 10. BARRIER FREE SUBCODE (CHAPTER 11 OF IBC/2021 &NJAC 5:23-7) NJUCC/ANSI A117.1-2021 11. ELEVATOR SUB CODE (NJAC 5:23-12) 2015 AMERICAN SOCIETY OF MECHANICAL ENGINEERS (ASME)

CONSTRUCTION CLASSIFICATION		TYPE IIA	
OCCUPANCY CLASSIFICATION			
BUILDING HEIGHT		3 STORIES	
BUILDING AREAS (GROSS):	EXISTING	PROPOSED	VOLUMEN
SECOND FL =	1,203.62 SF	NO CHANGE	12,036.2 CF
THIRD FL =	1,203.62 SF	NO CHANGE	10,832.58 CF
TOTAL =	2,407.24 SF	NO CHANGE	22,868.78 CF

STRUCTURAL LOADS

LEVEL	LIVE LOADS	DEAD LOADS	TOTAL LOADS
SECOND FL	40 PFS	15 PFS	55 PFS
THIRD FL	30 PFS	15 PFS	45 PFS
ROOF	30 PFS	15 PFS	45 PFS

ZONING INFORMATION - BOROUGH OF PASSAIC, KEYPORT

ADDRESS: 38-40 Broad Street
BLOCK: 21.01, LOT: 59

ZONE: GC
COMMERCIAL AND RESIDENTIAL BUILDING

LOT AND BULK REQUIREMENTS:

MINIMUMS	REQUIRED	EXISTING	PROPOSED	VARIANCE REQUESTED
LOT AREA	4,000 SF	3,631 SF	NO CHANGE	NO
LOT WIDTH	50'	37'	NO CHANGE	NO
FRONT YARD	--	--	NO CHANGE	NO
REAR YARD	30'	30'	NO CHANGE	NO
ONE SIDE	--	--	NO CHANGE	NO
BOTH SIDES	--	--	NO CHANGE	NO
MAXIMUMS	REQUIRED	EXISTING	PROPOSED	
LOT COVERAGE	70% MAIN BUILDING	66.29%	NO CHANGE	NO
LOT COVERAGE	70% TOTAL	22.35%	NO CHANGE	NO
IMPERVIOUS COVERAGE	80%	--	NO CHANGE	NO
BUILDING HEIGHT	35'	34'	NO CHANGE	NO
BUILDING STORIES	3	3	NO CHANGE	NO
PARKING	--	--	2	YES
ACC. BLDG. LOT COV.	5%	--	NO CHANGE	NO
ACC. BLDG. HEIGHT	15'	--	NO CHANGE	NO
ACC. BLDG. SETBACK	5'	--	NO CHANGE	NO

FLOOR AREA CALCULATION

LIVING SPACE AREAS - PER 389-43 (A). 1,000 SF MINIMUM REQUIED.

	EXISTING	PROPOSED
SECOND FLOOR, APART 1	502.16 SF	NO CHANGE
SECOND FLOOR, APART 2	461.34 SF	NO CHANGE
THIRD FLOOR, APART 1	1,045.2 SF	560.57 SF
THIRD FLOOR, APART 2	N/A	484.63 SF
TOTAL LIVING SPACE AREA:	2,008.7 SF	NO CHANGE

IMPERVIOUS AREA CALCULATION

IMPERVIOUS CALCULATION

	EXISTING	PROPOSED
BUILDING W/ STEPS	3,631 SF	NO CHANGE
GARAGE	--	NO CHANGE
DRIVEWAY	--	NO CHANGE
PERIMETER SIDEWALK	--	NO CHANGE
TOTAL	3,631 SF	NO CHANGE

TYPICAL PARTITION WALLS

3D REPRESENTATION

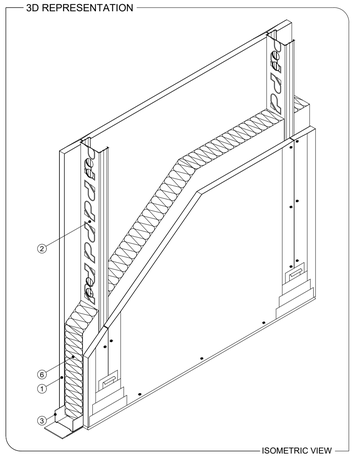

ISOMETRIC VIEW

SCOPE OF APLICATION

Interior partition walls within the same usage unit with high fire resistance and mechanical resistance performance.

(1) SHEETROCK BOARD @ AT CEILING,EXTERIOR WALL, & BT APARTMENTS)
(2) PLADUR STUD @ 16" O.C. / Or Wood STUD
(3) PLADUR TRACK / OR WOOD MUD STUD
(4) COARSE-THREAD DRYWALL SCREWS #6
(5) FIRESTOPPING
(6) R-30 FIBER INSULATIO AT EXTERIOR & R-13 AT INTERIOR
(7) FIXING TO SUPPORT

SIGNATURE BLOCK

§327-36 Legend to be indicated on site plans.
The following legends shall be indicated on the site plan:

A. To be signed before submission.

I consent to the filing of this site plan with the _____of the City of Keyport.

Applicant_____ Date_____

B. To be completed before submission.

Site plan of
Lot_____Block_____Zone
Date_____Scale
Applicant
Address

C. To be signed before submission.

I hereby certify that I have prepared this site plan and that all dimensions and information are correct.

Name

Title and License Number

D. To be signed before issuance of a building permit.

Approved by the_____of the City of Keyport.
Date Chairperson
Date Secretary

E. To be signed before_____approval is given.

I have reviewed this site plan and certify that it meets all codes and ordinances under my jurisdiction.
Date Engineer

F. To be signed before issuance of a certificate of occupancy. [Amended 4-16-1996 by Ord. No. 96-8]

I hereby certify that all required improvements have been installed or that a performance guaranty has been posted in accordance with § 327-70 of the Site Plan Ordinance.

Construction Official

Engineer

RJWA

Robie J. Wood, Architect

704 Center Street
Garwood, NJ 07027
(908) 591-8543
robie@rjwoodarchitects.com

Robie J. Wood, AIA
NJ LIC.# 17678

PROJECT NAME

38-40 BROAD STREET
KEYPORT, NJ 07735

PROJECT DESCRIPTION:
INTERIOR ALTERATION OF THIRD FLOOR; EXISTING SINGLE APARTMENT TO BE SUBDIVIDED INTO TWO APARTMENTS

OWNER INFORMATION

IVAN MARTINEZ
38-40 BROAD STREET
KEYPORT, NJ 07735

NO.	DESCRIPTION	DATE
	ISSUED FOR VARIANCE APPLICATION	3/26/25

DRAWING TITLE

PROJECT INFORMATION & ZONING

Seal

Date 03/26/2025
Project No. 25-008
Drawn by JG
Checked by HP,RW
DWG No.

A - 000.00

Scale AS INDICATED

GENERAL NOTES

1. COMPLY WITH CODES, LAWS, ORDINANCES, RULES, AND REGULATIONS OF PUBLIC AUTHORITIES GOVERNING THE WORK.
2. OBTAIN AND PAY FOR PERMITS AND INSPECTIONS REQUIRED BY PUBLIC AUTHORITIES GOVERNING THE WORK.
3. REVIEW DOCUMENTS, VERIFY DIMENSIONS AND FIELD CONDITIONS AND CONFIRM THAT WORK IS BUILDABLE AS SHOWN. REPORT ANY CONFLICTS OR OMISSIONS TO THE ARCHITECT FOR CLASSIFICATION PRIOR TO REFORMING ANY WORK IN QUESTION.
4. SUBMIT REQUEST FOR SUBSTITUTIONS, REVISIONS, OR CHANGES TO ARCHITECT FOR REVIEW PRIOR TO PURCHASE, FABRICATION OR INSTALLATION.
5. OWNER WILL PROVIDE WORK NOTED "BY OTHERS" OR "NIC" UNDER SEPARATE CONTRACT. INCLUDE SCHEDULE REQUIREMENTS IN CONSTRUCTION PROGRESS SCHEDULE AND COORDINATE TO ASSURE ORDERLY SEQUENCE OF INSTALLATION.
6. COORDINATE TELECOMMUNICATIONS, DATA AND SECURITY SYSTEM INSTALLATIONS.
7. PROTECT AREA OF WORK AND ADJACENT AREAS FROM DAMAGE.
8. DO NOT SCALE DRAWINGS. WRITTEN DIMENSIONS GOVERN. IN CASE OF CONFLICT, CONSULT THE ARCHITECT.
9. PARTITIONS ARE DIMENSIONED FROM FINISH FACE TO FINISH FACE, UNLESS OTHERWISE NOTED. MAINTAIN DIMENSIONS MARKED "CLEAR" OR "HOLD" ALLOW FOR THICKNESS OF FINISHES.
10. COORDINATE AND PROVIDE FIRE RESISTANT BLOCKING FOR MILLWORK AND ITEMS ATTACHED OR MOUNTED TO WALLS OR CEILINGS. 1 INCH UNLESS OTHERWISE NOTED. 11.UNDERCUT DOORS TO CLEAR TOP OF FLOOR FINISHES BY
12. CONCEALED INSULATING MATERIALS INSTALLED WITHIN WALL SHALL HAVE A FLAME SPREAD INDEX OF NOT MORE THAN 75 AND SMOKE–DEVELOPED INDEX OF NOT MORE THAN 450.
13. INSULATING MATERIALS WHICH ARE SUBJECT TO DIRECT EXPOSURE TO POTENTIAL FIRE ON THE INSIDE OF THE BUILDING DUE TO INSTALLATION IN UNCONCEALED SPACES SHALL HAVE A FLAME SPREAD INDEX OF NOT MORE THAN 25 AND A SMOKE–DEVELOPED INDEX OF NOT MORE THAN 450.
14. MATERIALS EXPOSED WITHIN PLENUMS ARE REQUIRED TO BE NONCOMBUSTIBLE OR SHALL HAVE A FLAME SPREAD INDEX OF NOT MORE THAN 25 AND A SMOKE – DEVELOPED INDEX OF NOT MORE THAN 50 AS DETERMINES IN ACCORDANCE WITH ASTM E 84.
15. ARCHITECTURAL SERVICE PROVIDED IN THESE DRAWINGS IS LIMITED TO ROOM ARRANGEMENT, DIMENSIONS, STRUCTURAL DESIGN, AND CONSTRUCTION DETAILS SHOWN.
16. THE ARCHITECT WILL NOT BE RESPONSIBLE WHERE CONSTRUCTION DEVIATES FROM DEPICTED OR IMPLIED INFORMATION WITHOUT WRITTEN AUTHORIZATION FROM HIS/HER OFFICE.
17. THE FOLLOWING UNLESS PROVIDED FOR IN THESE DRAWINGS, ARE TO BE FURNISHED BY THE OWNER
    A)SOIL BEARING CAPACITY
18. CONSTRUCTION SHOWN AND SPECIFIED SHALL CONFORM TO ALL APPLICABLE BUILDING CODES, WHERE LOCAL CODES CONFLICT WITH THESE DRAWINGS, CODE REQUIREMENTS TAKE PRECEDENCE.
19. ENTIRE CONSTRUCTION SHALL BE IN ACCORDANCE TO THE NEW JERSEY UNIFORM CONSTRUCTION CODE AND THE INTERNATIONAL RESIDENTIAL CODE – 2018 N.J. EDITION AS ADAPTED BY THE STATE OF NEW JERSEY AND ALL GOVERNING CODES AND BE APPROVED BY THEIR RESPECTIVE AGENCIES.
20. ALL CONTRACTORS AND SUB CONTRACTORS ARE RESPONSIBLE FOR ADHERING TO THE REQUIREMENTS AS SPELLED OUT IN THESE NOTES, ALL PARTIES MUST CAREFULLY READ ALL THE NOTES ITEMS WHICH MAY PERTAIN TO THEIR TRADES. FAILURE TO READ THE NOTES DOES NOT PERMIT THE CONTRACTOR TO DEVIATE FROM THEIR REQUIREMENTS.
21. GENERAL CONTRACTOR SHALL VERIFY ALL CONDITIONS AND CHECK ALL MEASUREMENTS ON JOB AND SHALL BE RESPONSIBLE FOR SAME AND IF ANY DEVIATIONS ARE FOUND THE ARCHITECT SHALL BE IMMEDIATELY NOTIFIED OF ANY DISCREPANCIES IN WRITING.
22. ALL OPENING IN WALLS, FLOORS, ROOF, ETC. TO BE LOCATED AND SIZED AS PER MECHANICAL AND ARCHITECTURAL REQUIREMENTS, EVEN IF NOT SHOWN AS MUCH, ON STRUCTURAL DRAWINGS.
23. ALL WALLS SHALL BE ADEQUATELY BRACED UNTIL THE ENTRIES STRUCTURAL FRAME HAS BEEN INSTALLED AND IS STRUCTURALLY SOUND.
24. ALL CONTRACTORS AND SUB CONTRACTORS ON THIS PROJECT SHALL BE RESPONSIBLE FOR THE PROPER PERFORMANCE OF THEIR WORK, COORDINATION WITH OTHER TRADES, METHODS, SAFETY AND SECURITY ON THE JOB SITE. ARCHITECTURAL OFFICE AND ITS AGENTS AND EMPLOYEE ARE NOT RESPONSIBLE OR LIABLE FOR THE ABOVE AND SHALL BE HELD HARMLESS AND INDEMNIFIED BY ALL CONTRACTORS ND AND SUB CONTRACTORS FROM ANY AND ALL CLAIMS, LOSSES, SUITS AND LEGAL ACTION WHATSOEVER ARISING FROM THE PERFORMANCE OF WORK ON THIS PROJECT.
25. CONTRACTORS SHALL VISIT SITE PRIOR TO COMMENCEMENT AND VERIFY LOCATION AND NATURE OF EXISTING ITEMS THAT CAN AFFECT THE WORK ARCHITECT AND OWNER SHALL BE NOTIFIED OF ANY DISCREPANCY BEFORE PROCEEDING.
26. GRADES AND ELEVATIONS SHOWN ON PLANS ARE APPROXIMATE AND SHOULD BE CHECKED AT THE SITE. PRIOR TO CONSTRUCTION.
27. CONTRACTORS SHALL NOT SCALED ANY DIMENSIONS FROM THE DRAWINGS.
28. CONTRACTOR TO VERIFY LOCATION OF ALL UTILITIES INCLUDING SANITARY SEWER, GRAVITY AND FORCE WATER MAINS, GAS, AND ELECTRIC PRIOR TO EXCAVATION, AND OR CONSTRUCTION.
29. PROVIDE WATER–RESISTANT GYPSUM BACKED BD, IN ALL AREAS SUBJECTED TO REPEATED DAMP CONDITIONS AND MOISTURE ACCUMULATIONS SUCH AS BATHTUBS AND SHOWER COMPARTMENTS COMPLYING WITH ASTM C630
30. ALL EGRESS WINDOWS TO COMPLY WITH MINIMUM OPENING REQUIREMENT, CLEAR OPENING AREA OF 57 S.F.

POWER/COMMUNICATIONS GENERAL NOTES

1. INSTALL OUTLETS ON OPPOSITE SIDES OF PARTITIONS IN SEPARATE STUD CAVITIES. DO NOT INSTALL BACK–TO–BACK.
2. FURNITURE SHOWN FOR REFERENCE ONLY.
3. IDENTIFY DEDICATED OR ISOLATED GROUND ELECTRICAL OUTLETS WITH A RED DOT.
4. LOCATION OF ALL CORES TO BE CONFIRMED WITH ARCHITECT.
5. CONFIRM ALL LOCATION OF ELECTRICAL AND DATA COVER PLATES WITH ARCHITECT. ALL DEVICE COVER PLATES SHALL MATCH EXISTING UON.
6. WALL MOUNTED OUTLETS / J–BOXES TO BE AT 15" A.F.F. UNLESS OTHERWISE NOTED.
7. VERIFY EQUIPMENT SPECIFICATIONS, POWER AND INSTALLATION REQUIREMENTS WITH MANUFACTURER TO ENSURE PROPER FIT AND FUNCTION.
8. VERIFY MOUNTING REQUIREMENTS OF ELECTRICAL, TELEPHONE AND OTHER EQUIPMENT.
9. GANG ADJACENT LIGHT SWITCHES AND COVER WITH A SINGLE PLATE.
10. INDICATED DIMENSIONS ARE TO THE CENTER LINE OF OUTLET OR SWITCH, OR CLUSTER OF OUTLETS OR SWITCHES, UNLESS OTHERWISE NOTED.
11. INSTALL OUTLETS ON OPPOSITE SIDES OF PARTITIONS IN SEPARATE STUD CAVITIES. DO NOT INSTALL BACK–TO–BACK.
12. PROVIDE MATCHING COVER PLATES, RECEPTACLES AND RELATED ITEMS.PROVIDE ONE–PIECE TYPE GANG COVER PLATES, UON.
13. IDENTIFY DEDICATED OR ISOLATED GROUND OUTLETS WITH A RED DOT.
14. ALL PENETRATIONS THROUGH FIRE RATED WALL SHALL BE FIRE PROOFED.
15. VERIFY EQUIPMENT SPECIFICATIONS, POWER AND INSTALLATION REQUIREMENTS WITH MANUFACTURER TO ENSURE PROPER FIT AND FUNCTION.
16. VERIFY MOUNTING REQUIREMENTS OF ELECTRICAL, TELEPHONE AND OTHER EQUIPMENT. SYSTEMS.
17. GANG ADJACENT LIGHT SWITCHES AND COVER WITH A SINGLE PLATE.
18. INDICATED DIMENSIONS ARE TO THE CENTER LINE OF OUTLET OR SWITCH, OR CLUSTER OF OUTLETS OR SWITCHES, UNLESS OTHERWISE NOTED.

DISABLED ACCESS NOTES

1. IN BUILDINGS AND FACILITIES, FLOORS OF A GIVEN STORY SHALL BE A COMMON LEVEL THROUGHOUT, OR SHALL BE CONNECTED BY PEDESTRIAN RAMPS, PASSENGER ELEVATORS OR SPECIAL ACCESS LIFTS.
2. FLOOR SURFACES SHALL BE SLIP–RESISTANT.
3. ABRUPT CHANGES IN LEVEL ALONG ANY ACCESSIBLE ROUTE SHALL NOT EXCEED ½" IN HEIGHT. LEVEL CHANGES NOT EXCEEDING ¼" MAY BE VERTICAL. BEVEL OTHERS WITH A SLOPE NO GREATER THAN 1: 2.
4. LATCHING AND LOCKING DOORS THAT ARE HAND ACTIVATED AND WHICH ARE IN A PATH OF TRAVEL SHALL BE OPERABLE WITH A SINGLE EFFORT BY LEVER TYPE HARDWARE, PANIC BARS, PUSH–PULL ACTIVATING BARS, OR OTHER HARDWARE DESIGNED TO PROVIDE PASSAGE WITHOUT REQUIRING THE ABILITY TO GRASP THE OPENING HARDWARE. MOUNT DOOR OPENING HARDWARE BETWEEN 30" AND 44" ABOVE FLOOR FINISH.
5. CENTER HAND ACTIVATED DOOR OPENING HARDWARE BETWEEN 30" AND 44" ABOVE THE FLOOR.
6. MAXIMUM PULL OR PUSH EFFORT TO OPERATE DOORS SHALL NOT EXCEED 8.5 POUNDS FOR EXTERIOR DOORS AND 5 POUNDS FOR INTERIOR DOORS, MEASURED AT RIGHT ANGLES TO HINGED DOORS AND AT CENTER PLANE OF SLIDING OR FOLDING DOORS. CORRESPONDING DEVICES OR AUTOMATIC DOOR OPERATORS MAY BE UTILIZED TO MEET THE ABOVE STANDARDS. MAXIMUM EFFORT TO OPERATE REQUIRED FIRE DOORS MAY BE INCREASED NOT TO EXCEED 15 POUNDS.
7. THE BOTTOM 10" OF ALL DOORS (EXCEPT SLIDING AND AUTOMATIC) SHALL HAVE A SMOOTH UNINTERRUPTED SURFACE TO ALLOW THE DOOR TO BE OPENED BY A WHEELCHAIR FOOTREST WITHOUT CREATING A TRAP OR HAZARDOUS CONDITION. PROVIDE A 10" HIGH SMOOTH PANEL ON THE PUSH SIDE OF NARROW FRAME DOORS.
8. EVERY REQUIRED ENTRANCE OR PASSAGE DOORWAY SHALL BE NOT LESS THAN 3' IN WIDTH AND NOT LESS THAN 6'–8" IN HEIGHT. DOORS SHALL BE CAPABLE OF OPENING AT LEAST 90 DEGREES AND SHALL BE SO MOUNTED THAT THE CLEAR WIDTH OF THE DOORWAY IS NOT LESS THAN 32".
9. WHERE A PAIR OF DOORS IS UTILIZED, AT LEAST ONE OF THE DOORS SHALL PROVIDE A CLEAR, UNOBSTRUCTED OPENING WIDTH OF 32" WITH THE LEAF POSITIONED AT AN ANGLE OF 90 DEGREES FROM ITS CLOSED POSITION.
10. THE FLOOR OR LANDING ON EACH SIDE OF AN ENTRANCE OR PASSAGE DOOR SHALL BE LEVEL AND CLEAR. THE LEVEL AND CLEAR AREA SHALL HAVE A LENGTH IN THE DIRECTION OF DOOR SWING OF AT LEAST 60" AND THE LENGTH OPPOSITE THE DIRECTION OF DOOR SWING OF 44" AS MEASURED AT RIGHT ANGLES TO THE PLANE OF THE DOOR IN ITS CLOSED POSITION. (REFER TO DWG. 2/A00.40 FOR CLEARANCES BASED ON DIFFERENT APPROACHES).
11. FLOORS OR LANDINGS SHALL BE NOT MORE THAN ½" LOWER THAN THE THRESHOLD OF THE DOORWAY. CHANGE IN LEVEL BETWEEN ¼" AND ½" SHALL BE BEVELED WITH A SLOPE NO GREATER THAN 1: 2.
12. CENTER ELECTRICAL RECEPTACLE OUTLETS NOT LESS THAN 15" ABOVE THE FLOOR OR WORKING PLATFORM.

FOUNDATION NOTES

1. PLACE ALL DEEP FILLS UNDER SLABS IN 8" LAYERS COMPACTED MINIMUM A A.S.H.O DENSITY.
2. WHERE FOOTING ARE STEPPED, BOTTOMS SHALL NOT SLOPE MORE THAN ONE FOOT VERTICALLY FOR EACH TWO FEET HORIZONTALLY.
3. FOOTING ARE DESIGNED FOR AND SHALL BEAR ON FIRM, UNDISTURBED SOIL HAVING 4,000 P.S.F. BEARING CAPACITY MINIMUM
4. CONSTRUCT GROUND SLABS ON 4" OF POROUS FILL (CRUSHED STONE, BANKRUPT, OR SAND
5. CONCRETE SHALL BE 2.500 P.S.I. STONE AGGREGATE READY MIX FOR FOOTING AND 3.000 P.S.I./ FOR SLABS
6. UNLESS OTHERWISE NOTED, FOUNDATION WALLS SHALL BE CONSTRUCTED WITH GRADE "N" TYPE I HOLLOW, LOAD–BEARING CONCRETE MASONRY UNITS WITH TYPE "M" MORTAR PROVIDE HORIZONTAL REINFORCING CONTINUOUS EVERY OTHER LOCK COURSE, ABOVE GRADE HORIZONTAL REINFORCING EVERY GRADE BELLOW GRADE.

GYPSUM BOARD

1. ALL GYPSUM WALLBOARD APPLICATIONS SHALL BE IN ACCORDANCE TO GA–216 (APPLICATION AND FINISHING OF GYPSUM BOARD) AND GA–600 (FOR RESISTANCE DESIGN MANUAL)
2. IN ALL AREAS SUBJECTED TO REPEATED DAMP CONDITIONS AND MOISTURE ACCUMULATION (BATHTUB AND SHOWER COMPARTMENTS, LAUNDRY AREAS, ETC) WATER–RESISTANT GYPSUM BACKER BOARD COMPLYING WITH ASTM C630 (SPECIFICATION FOR WATER RESISTANCE GYPSUM BACKING BOARD) SHALL BE USED.
3. ALL GYPSUM BOARD MATERIALS SHALL CONFORM TO STANDARDS OF ASTM C36 (GYPSUM WALLBOARD_ ASTM C474, C475 (JOIN REINFORCING, TAPE AND COMPOUND), AND C514 (NAILS FOR GYPSUM BOARDS).
4. ALL BEARING WALLS IN 5 – A CONSTRUCTION TO BE ⅝" F.C.I H.R F.R CONSTRUCTION.

CONCRETE ENCASED ELECTRODES

1. WHEN FOOTING OF THE STRUCTURE HAS INITIATED, CONDUCTIVE STEEL REINFORCING BARS MEASURING A MINIMUM OF 1 " DIAMETER AND 20 MORE FEET IN LENGTH, IT IS REQUIRED TO BE BONDED TO THE GROUNDING ELECTRODE SYSTEM IN NEW CONSTRUCTION IF ENCASES IN NOT LESS THAN 2" OF CONCRETE.
2. THE GENERAL CONTRACTOR AND THE ELECTRICAL CONTRACTORS SHALL COMPLY WITH THE ELECTRICAL SUBCODE, NEC 1999, SECTION 250–50 (C). A CONSTRUCTION PERMIT UNDER THE ELECTRICAL SUBCODE IS REQUIRED FOR THE BONDING CLAMP OTHER MEANS OF CONNECTION PRIOR TO ITS INSTALLATION. A LISTED CLAMP CONNECTS THE REBAR TO THE CONDUCTOR AS PER NEC 1999, 250–66 (B).

CONCRETE AND FOOTING NOTES:

1. ALL SOILS SHALL BE TESTED AND FOUND ADEQUATE FOR A MINIMUM OF TWO (2) TON BEARING CAPACITY PER SQUARE FOOT
2. ALL CONCRETE SHALL TEST 3000 PSI AT 28 DAYS, AND TO BE IN ACCORDANCE WITH A.C.I SPECS
3. ALL EXPOSED WALLS SHALL BE CONSTRUCTED OF EXALITE BLOCKS, EXCEPT AS NOTED
4. ALL EXPOSED INTERIOR CONCRETE FLOOR SLABS HAVE A STEEL TROWEL FINISH WITH HARDENER AND SEALER COATING, EXCEPT AS NOTED
5. ALL FOOTING SHALL BE ON SOLID UNDISTURBED EARTH, FREE OF DEBRIS AND ANY SOFT CLAY, PEAT, OR ORGANIC SILT. EXTERIOR FOOTING MUST EXTEND TO A MINIMUM OF 3'–0" BELOW FINISHED GRADE.
6. ALL SOIL FILL SHALL BE OF SUITABLE MATERIAL AND COMPACTED TO 95%
7. PROVIDE 4 INCHES OF CRUSHED STONE AND 5 ML VAPOR BARRIER BELOW ALL CONCRETE SLABS ON EARTH, EXCEPT AS NOTED. ALL SLABS TO BE REINFORCED WITH 6' X 6' WELDED WIRE MESH UNLESS NOTED EXCEPT AS NOTED
8. ALL CONCRETE SLABS ON GRADE SHALL HAVE SUPER PLASTICIZER ND REINFORCED WITH POLYESTER FIBERS W.R. GRACE, INC. SPECIFICATIONS. ALL SLABS ON GRADE SHALL HAVE A MAXIMUM SIZE OF 20'–0" X 20'–0" BETWEEN SAW CUTS UNLESS OTHERWISE NOTED ALL SLABS SUPPORTED ON OPEN WEB STEEL JOISTS OR STRUCTURAL STEEL SHALL HAVE SUPER PLASTICIZER AND POLYESTER FIBERS AS PER W.R. GRACE, INC. SPECIFICATIONS AND ADDITIONAL REINFORCING WITH WELDED WIRE FABRIC AS SHOWN ON PLANS. THE MAXIMUM DIMENSIONS BETWEEN SAW CUTS SHALL BE 15'–0" X 15'–0.

LUMBER

1. ALL LUMBER AND FASTENING SHALL CONFORM TO THE NATIONAL DESIGN SPECIFICATIONS RECOMMENDED BY THE NATIONAL FIRE PROTECTION ASSOCIATION.
2. STRUCTURAL LUMBER SHALL BE DOUGLAS FIR WITH A BENDING FIBER STRESS OF 1400 PSI AND "E" OF 1450000 PSI, MAXIMUM MOISTURE CONTENT OF 19%
3. USE WOOD HEADERS AS FOLLOWS (EXCEPT AS OTHERWISE NOTED ON PLANS): 0'–0" TO 2'–0" USE (2) 2" X 4" 2'–0" TO 2'–6" USE (2) 2" X 6" 2'–6" TO 4'–0" USE (2) 2" X 8" 4'–0" TO 6'–0" USE (2) 2" X 10" 6'–0" TO 8'–0" USE (2) 2" X 12"
5. PROVIDE DOUBLE STUD BEARING POST AT BEARING ENDS FOR SPANS OF 4'–0" AND OVER.
6. ALL STRUCTURAL MEMBERS TO HAVE AT LEAST 3–1/2" SURFACE BEARING
7. FIRE RESISTANCE RATING AND PROTECTION OF STRUCTURAL MEMBERS SHALL COMPLY WITH TABLE 401 (BOCA CODE)8.0REINFORCE ALL 8.
8. EXISTING STRUCTURAL CONDITIONS TO RECEIVE NEW WORK
9. ALL WOOD ON CONTACT WITH MASONRY, CONCRETE OR SOIL SHALL BE PRESSURE TREATED.
10. PROVIDE BRIDGING FOR ALL FLOOR JOIST, CEILING BEAMS AND RAFTERS AT INTERVALS OF 8'–0" MAXIMUM.

MASONRY

1. ALL MASONRY TO BE LAID IN THE RUNNING BOND METHOD.
2. ALL MASONRY WALLS SHALL HAVE THE BOTTOM 2 COURSES FILLED SOLID WITH CONCRETE AND A MINIMUM OF 8" SOLID CP UNDER FRAMING MEMBERS. NO CINDER BLOCK IS PERMITTED IN EXTERIOR BEARING WALLS.
3. PROVIDE 8" SOLID BREAK MASONRY UNDER GIRDER ENDS
4. ALL BRICK VENEER SHALL BE ANCHORED TO MASONRY OR WOOD FRAMING WITH ANODIZED TIES 16" O/C HORIZONTALLY AND 16" O/C VERTICALLY
5. BRICK VENEER SHALL BE BEAR ON 12" BLOCK FOUNDATION WALL, UNDER FIRST COURSE OF BRICK PROVIDE FLASHING WITH WEEPHOLES AT 8'–0' O/C
6. HOLLOW LOAD BEARING UNITS SHALL BE MADE OF CONCRETE AND HAVE A MINIMUM COMPRESSIVE STRENGTH OF 1000 POUNDS PER SQUARE INCH
7. SOLID LOAD BEARING SHALL BE MADE OF CONCRETE AND HAVE A MINIMUM COMPRESSIVE STRENGTH OF 1800 POUNDS PER SQUARE INCH
8. ALL MORTAR SHALL BE OF TYPE M OR S (UNLESS OTHERWISE SPECIFIED), AND IN ACCORDANCE TO REQUIREMENTS OF A STM C270 OR C476 STANDARDS AND BE OF A COLOR TO MATCH THE MASONRY.
9. ALL GROUT SHALL BE OF NON–SHRINK VARIETY AND SHALL COMPLY TO ASTM C404 STANDARDS. GROUT SHALL BE USED TO SET ALL STRUCTURAL MEMBERS, SET ON CONCRETE OR MASONRY
10. COLD WEATHER CONSTRUCTION: MASONRY LAID IN THE TEMPERATURE BELOW 40 DEGREES (4 DEG . C.) SHALL BE PROTECTED IN ACCEPTANCE TO IMIAWC.
11. ALL MASONRY WALLS SHALL BE LATERALLY BRACED OF SUFFICIENT MEANS: BY HORIZONTAL BRACING BY FLOORS, ROOFS, OR VERTICAL BRACING OF COLUMNS AS SPECIFIED IN NBS 211, NBS H14, ACI 531, NCMA TRT–B OR BIA STANDARDS DURING CONSTRUCTION
12. ALL SOIL FILL SHALL BE OF SUITABLE MATERIAL AND COMPLETE TO 95%
13. PROVIDE 4" OF CRUSHED STONE AND 5 MIL. VISQUEEN VAPOR BARRIER BELOW ALL CONCRETE SLABS ON EARTH, EXCEPT AS NOTED.
14. ALL CONCRETE SLABS ON GRADE SHALL HAVE SUPER ELASTICIZED AND REINFORCED WITH POLYESTER FIBERS AS PER W.R GRACE, INC. SPECIFICATIONS. ALL SLABS ON GRADE SHALL HAVE A MAXIMUM SIZE OF 20'–0" X 20'–0" BETWEEN SAW CUTS UNLESS OTHERWISE NOTED.
15. ALL EXPOSED INTERIOR CONCRETE FLOOR SLABS HAVE A STEEL TROWEL FINISH WITH HARDENER AND SEALER COATING, EXCEPT NOTED.
16. ALL SLABS SUPPORTED ON OPEN STEAL JOIST OR STRUCTURAL STEEL SHALL HAVE SUPER PLASTICIZER AND POLYESTER FIBERS AS PER W.R. GRACE, INC. SPECIFICATIONS AND ADDITIONAL REINFORCING WITH WELDED WIRE FABRIC AS SHOWN ON PLANS. THE MAXIMUM DIMENSIONS BETWEEN SAW CURS SHALL BE 15'–0" X 15'–0"
17. PROVIDE DUR–O–WALL EVERY 16" O/C HORIZONTALLY UNLESS OTHERWISE NOTED. PROVIDE ICON INSULATION FOR ALL EXTERIOR WALLS.

ELECTRICAL NOTES

1. ALL ELECTRICAL WORK SHALL COMPLY WITH NE NATIONAL ELECTRICAL CODE AND NE LOCAL REGULATIONS. THE CONTRACTOR SHALL PERFORM ALL WORK IN CONFORMITY WITH THESE REQUIREMENTS WHETHER OR NOT SUCH WORK IS SPECIFICALLY SHOWN ON THE DRAWINGS. THE ELECTRICAL WORK INCLUDES, BUT IS NOT NECESSARILY LIMITED TO.

A. FURNISHINGS AND INSTALLING FEEDERS, PANEL BOARDS, BRANCH CIRCUIT WIRING, WALL SWITCHES, RECEPTACLES, OUTLET BOXES, PLATES, CONDUITS, WIRE ALL AS SHOWN.
B. FURNISHINGS AND INSTALLING COMPLETE WIRE FOR MOTORS, EXHAUST FANS, AND PUMPS.
C. FURNISHING AND INSTALLING LINE VOLTAGE CONNECTIONS, FOR HEATING AND AIR–CONDITIONING EQUIPMENT.
D. FURNISHING AND INSTALLING LIGHTING FIXTURES AS SHOWN AND INSTALLING LIGHTING FIXTURES SPECIFIED TO BE SELECTED BY OWNER.

2. MATERIALS AND EQUIPMENT SHALL COMPLY WITH THE APPLICABLE CURRENT STANDARDS OF UNDERWRITERS LABORATORIES, INC. WHERE SUCH STANDARDS EXIST.
3. PROVIDE INDIVIDUAL BRANCH CIRCUIT FOR ANY FIXED APPLIANCES OR EQUIPMENT RATED AT MORE THAN 1400 WATTS.
4. RECEPTACLE OUTLETS INSTALLED IN LAVATORIES, GARAGES, AND ALL EXTERIOR LOCATIONS SHALL BE OF THE GROUNDING TYPE
5. EXCEPT WHERE OTHERWISE SHOWN ON DRAWINGS, THE MOUNTING HEIGHT FROM THE FLOOR FOR WALL SWITCHES SHALL BE 45" AND WALL RECEPTACLES SHALL BE 14".
6. THE ELECTRICAL CONTRACTOR SHALL COORDINATE HIS WORK WITH WORK OF TRADES AND HAVE HIS WORK SCHEDULED SO AS NOT TO DELAY THE WORK OF OTHERS.
7. THE CONTRACTOR SHALL BE RESPONSIBLE FOR INSPECTION AND APPROVAL OF WIRING, INSTALLATION OF FIXTURES AND EQUIPMENT, AND FOR FINAL ACCEPTANCE OF THE COMPLETE ELECTRICAL INSTALLATIONS BY THE LOCAL ELECTRICAL INSPECTIONS.
8. ELECTRICAL SERVICE TO BE 200 AMPS AND TO HAVE DIRECT METERING FACILITIES ON EXTERIOR AND INTERIOR OF BUILDING AS DIRECTED BY THE ARCHITECT IN FIELD.

RJWA

Robie J. Wood, Architect

704 Center Street
Garwood, NJ 07027
(908) 591-8543
robie@rjwoodarchitects.com

Robie J. Wood, AIA
NJ LIC.# 17678

PROJECT NAME

38-40 BROAD STREET
KEYPORT, NJ 07735

PROJECT DESCRIPTION:
INTERIOR ALTERATION OF THIRD FLOOR; EXISTING SINGLE APARTMENT TO BE SUBDIVIDED INTO TWO APARTMENTS

OWNER INFORMATION

IVAN MARTINEZ
38-40 BROAD STREET
KEYPORT, NJ 07735

NO.	DESCRIPTION	DATE
	ISSUED FOR VARIANCE APPLICATION	3/26/25

DRAWING TITLE

GENERAL NOTES

Seal

Date 03/26/2025
Project No. 25-008
Drawn by JG
Checked by HP.RW
DWG No.

A - 001.00

Scale AS INDICATED

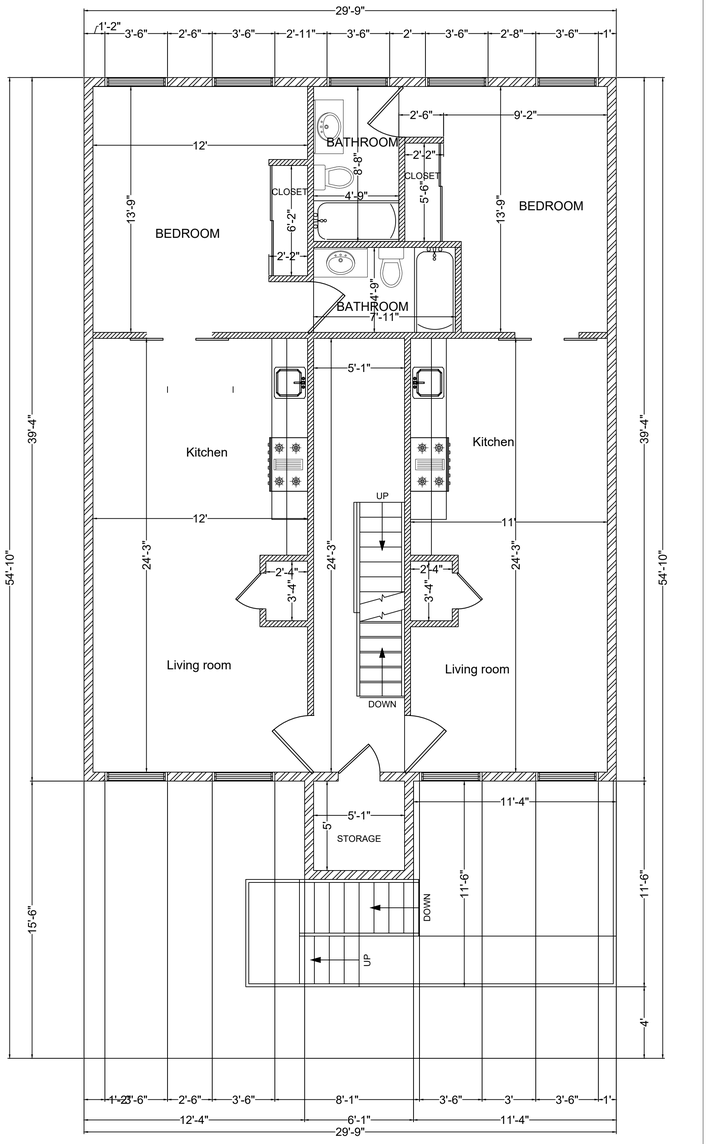

1ST APT :	549.47 SF
2ND APT:	503.44 SF
2ND FLOOR:	1203.63 SF

EXISTING
1 SECOND FLOOR PLAN
SCALE :1/4" = 1'-0"

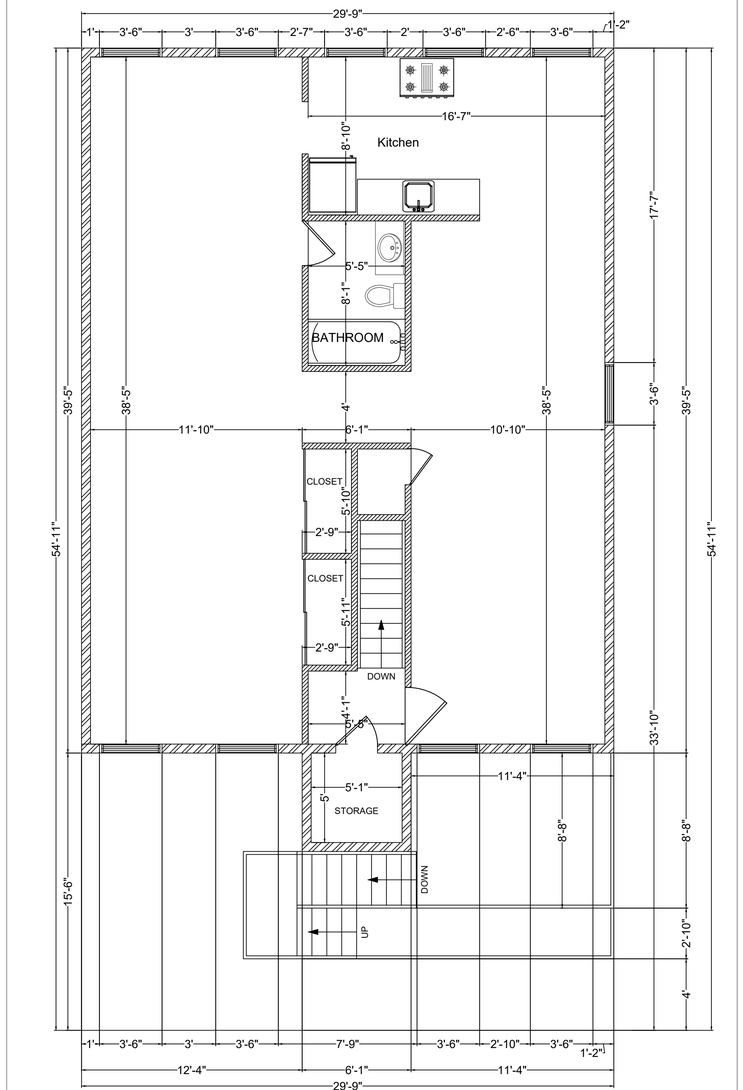

APT:	1125.38 SF
3RD FLOOR:	1203.63 SF

EXISTING
2 THIRD FLOOR PLAN
SCALE :1/4" = 1'-0"

CONSTRUCTION KEY NOTES

A. UNLESS OTHERWISE NOTED ALL CONCRETE SHALL BE STONE AGGREGATE WITH A 28 DAY STRENGTH OF 3000 PSI MINIMUM.
B. INSULATION TO BE INSTALLED AS PER MANUFACTURER SPECIFICATIONS.
C. INSULATION BAFFLES TO BE INSTALLED AT ALL EAVE LOCATIONS.
D. PROVIDE CERTAIN TEED FIBERGLASS BATT INSULATION OR EQUAL AT EXTERIOR WALLS. MIN. R20.
E. USE RUBBERIZED ASPHALT FLASHING WITH STAINLESS STILL DRIP EDGE. USE PRIMER WHEN INSTALLING FLASHING IN TEMPERATURES BELOW 50 FL. USE MASTIC AT ALL LAPS AND SEAMS. LAP 4" OR GREATER. USE END WALLS AT ALL DISCONTINUOUS FLASHING.

F. DESIGN LOADS:
——

G. THERMAL PERFORMANCE:
ROOF: ——
EXTERIOR WALLS: ——

H. STAIRS: (IF APPLICABLE)
NEW WOOD STAIRS WITH MAX RISER HEIGHT @ 8 ¼"AND MIN. TREAD @ 9". ALL RISERS TO BE CLOSED. NOSING SHALL BE NOT LESS THAN ¾" AND NO MORE THAN 1 ¼". THE HEADROOM SHALL BE A MIN. OF 6'–8". CONTRACTOR TO PROVIDE HANDRAIL EACH SIDE @ 2'–6" A.F.F. TYPICAL. ALL HANDRAIL SHALL BE CONTINUOUS FULL LENGTH OF STAIRS AND ENDS SHALL BE RETURNED OR SHALL TERMINATE THE NEWEL POSTS OR SAFETY TERMINALS. HANDRAIL GRIP SHALL HAVE A CIRCULAR CROSS SECTION OF 1 ¼" MIN. TO 2 5/8" MAX. ALL STAIR TREADS SHALL BE DESIGNED IN ACCORDANCE WITH THE INTERNATIONAL RESIDENTIAL CODE 2018, NEW JERSEY EDITION, TABLE R–301.5 ALL STAIR TREADS SHALL BE DESIGNED FOR THE UNIFORMLY DISTRIBUTED LIVE LOAD OF 40 LBS PER SQUARE FOOT AND A 300 POUND CONCENTRATED LOAD ACTING OVER AN AREA OF 4 SQUARE INCHES.
I. ALL GYPSUM WALLBOARD APPLICATIONS SHALL BE IN ACCORDANCE TO GA–216 (APPLICATION AND FINISHING OF GYPSUM BOARD) AND G–A 600 (FIRE RESISTANCE DESIGN MANUAL).
J. IN ALL AREAS SUBJECTED TO REPEATED DAMP CONDITIONS AND MOISTURE ACCUMULATION (BATHTUB AND SHOWER COMPARTMENTS, LAUNDRY AREAS, KITCHEN, ET). WATER–RESISTANT GYPSUM BACKER BOARD COMPLYING WITH ASTM C360 (SPECIFICATION FOR WATER RESISTANCE GYPSUM BACKING BOARD) SHALL BE USE.
K. ALL GYPSUM BOARD MATERIALS SHALL CONFIRM TO STANDARDS OF ASTM C36 (GYPSUM WALLBOARD) ASTM C474, C475 (JOINT REINFORCING, TAPE AND COMPOUND), AND ASTM C514 (NAILS FOR GYMS BOARDS).
L. ALL BEARING WALLS IN 5–A CONSTRUCTION TO BE ⅝" F.C. 1 HR F.R. CONSTRUCTION.
M. WHEN THE FOOTING OF THE STRUCTURE HAS UNCOATED, CONDUCTIVE STEEL REINFORCING BARS MEASURING A MINIMUM OF ½" DIAMETER AND 20 OR MORE FEET IN LENGTH, IT IS REQUIRED TO BE BONDED TO THE GROUNDING ELECTRODE SYSTEM IN NEW CONSTRUCTION IF ENCASED IN NOT LESS THAN 2"OF CONCRETE.
N. THE GENERAL CONTRACTOR AND THE ELECTRICAL CONTRACTOR SHALL COMPLY WITH THE ELECTRICAL SUB CODE, NEC 1999, SECTION 250–50 (C). A CONSTRUCTION PERMIT UNDER THE ELECTRICAL SUB CODE IS REQUIRED FOR THE BONDING CLAMP OR OTHER MEANS OF CONNECTION PRIOR TO ITS INSTALLATION. A LISTED CLAMP CONNECTS THE REBAR TO THE CONDUCTOR AS PER NEC 1999, SECTION 250–66 (B)
O. OWNER MUST SUBMIT THE FOLLOWING: SOIL BEARING CAPACITY REPORT FINAL SURVEY
P. EGRESS WINDOWS TO COMPLY WITH MINIMUM OPENING REQUIREMENTS; CLEAR OPENING AREA OF 5.7 SQ. FT.

EXISTING BRICK WALL
EXISTING INTERIOR FRAME WALL

RJWA
Robie J. Wood, Architect
704 Center Street
Garwood, NJ 07027
(908) 591-8543
robie@rjwoodarchitects.com
Robie J. Wood, AIA
NJ LIC.# 17678

PROJECT NAME
38-40 BROAD STREET
KEYPORT, NJ 07735

PROJECT DESCRIPTION:
INTERIOR ALTERATION OF THIRD FLOOR; EXISTING SINGLE APARTMENT TO BE SUBDIVIDED INTO TWO APARTMENTS

OWNER INFORMATION
IVAN MARTINEZ
38-40 BROAD STREET
KEYPORT, NJ 07735

NO.	DESCRIPTION	DATE
	ISSUED FOR VARIANCE APPLICATION	3/26/25

DRAWING TITLE
EXISTING FLOOR PLANS

Seal

Date 03/26/2025
Project No. 25-008
Drawn by JG
Checked by HP,RW
DWG No.
A - 100.00
Scale AS INDICATED

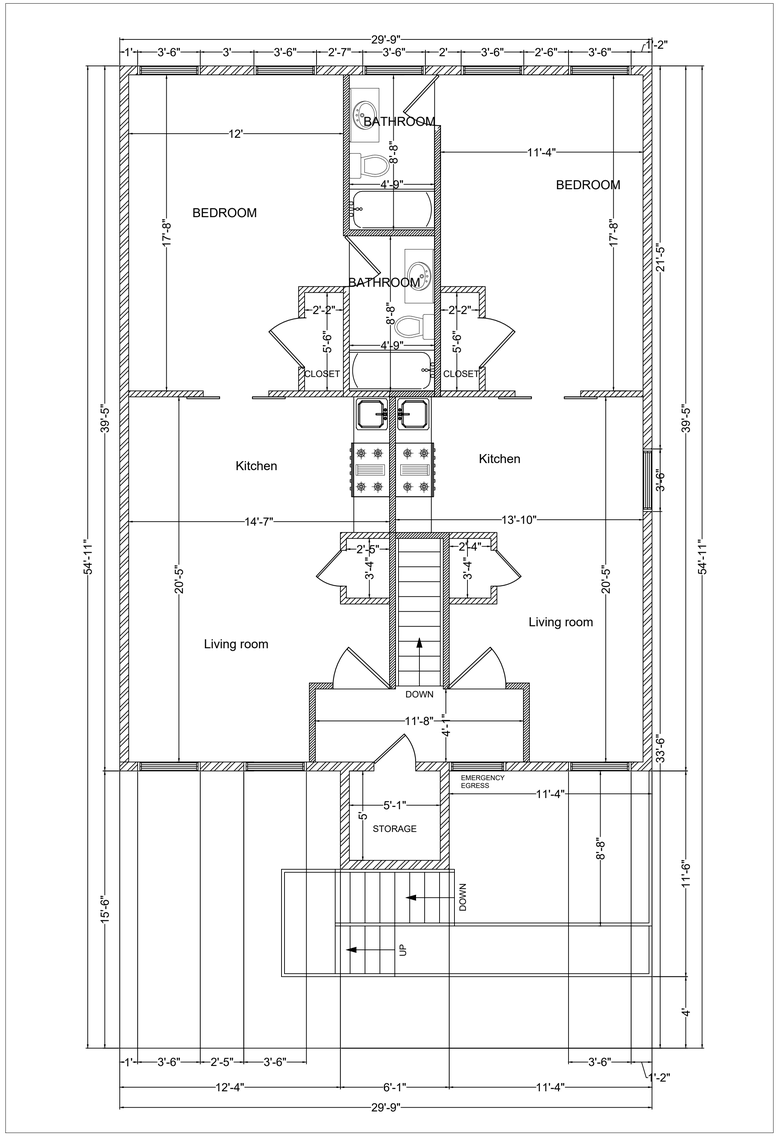

PROPOSED
1/THIRD FLOOR PLAN
SCALE :1/4" = 1'-0"

1ST APT :	602.08 SF
2ND APT:	534.85 SF
TOTAL:	1203.63 SF

CONSTRUCTION KEY NOTES

A. UNLESS OTHERWISE NOTED ALL CONCRETE SHALL BE STONE AGGREGATE WITH A 28 DAY STRENGTH OF 3000 PSI MINIMUM.
B. INSULATION TO BE INSTALLED AS PER MANUFACTURER SPECIFICATIONS.
C. INSULATION BAFFLES TO BE INSTALLED AT ALL EAVE LOCATIONS.
D. PROVIDE CERTAIN TEED FIBERGLASS BATT INSULATION OR EQUAL AT EXTERIOR WALLS. MIN. R20.
E. USE RUBBERIZED ASPHALT FLASHING WITH STAINLESS STILL DRIP EDGE. USE PRIMER WHEN INSTALLING FLASHING IN TEMPERATURES BELOW 50 FL. USE MASTIC AT ALL LAPS AND SEAMS. LAP 4" OR GREATER. USE END WALLS AT ALL DISCONTINUOUS FLASHING.

F. DESIGN LOADS:
——

G. THERMAL PERFORMANCE:
ROOF: ——
EXTERIOR WALLS: ——

H. STAIRS: (IF APPLICABLE)
NEW WOOD STAIRS WITH MAX RISER HEIGHT @ 8 ¼"AND MIN. TREAD @ 9". ALL RISERS TO BE CLOSED. NOSING SHALL BE NOT LESS THAN ¾" AND NO MORE THAN 1 ¼". THE HEADROOM SHALL BE A MIN. OF 6'–8". CONTRACTOR TO PROVIDE HANDRAIL EACH SIDE @ 2'–6" A.F.F. TYPICAL. ALL HANDRAIL SHALL BE CONTINUOUS FULL LENGTH OF STAIRS AND ENDS SHALL BE RETURNED OR SHALL TERMINATE THE NEWEL POSTS OR SAFETY TERMINALS. HANDRAIL GRIP SHALL HAVE A CIRCULAR CROSS SECTION OF 1 ¼" MIN. TO 2 5/8" MAX. ALL STAIR TREADS SHALL BE DESIGNED IN ACCORDANCE WITH THE INTERNATIONAL RESIDENTIAL CODE 2018, NEW JERSEY EDITION, TABLE R–301.5 ALL STAIR TREADS SHALL BE DESIGNED FOR THE UNIFORMLY DISTRIBUTED LIVE LOAD OF 40 LBS PER SQUARE FOOT AND A 300 POUND CONCENTRATED LOAD ACTING OVER AN AREA OF 4 SQUARE INCHES.
I. ALL GYPSUM WALLBOARD APPLICATIONS SHALL BE IN ACCORDANCE TO GA–216 (APPLICATION AND FINISHING OF GYPSUM BOARD) AND G–A 600 (FIRE RESISTANCE DESIGN MANUAL).
J. IN ALL AREAS SUBJECTED TO REPEATED DAMP CONDITIONS AND MOISTURE ACCUMULATION (BATHTUB AND SHOWER COMPARTMENTS, LAUNDRY AREAS, KITCHEN, ET). WATER–RESISTANT GYPSUM BACKER BOARD COMPLYING WITH ASTM C360 (SPECIFICATION FOR WATER RESISTANCE GYPSUM BACKING BOARD) SHALL BE USE.
K. ALL GYPSUM BOARD MATERIALS SHALL CONFIRM TO STANDARDS OF ASTM C36 (GYPSUM WALLBOARD) ASTM C474, C475 (JOINT REINFORCING, TAPE AND COMPOUND), AND ASTM C514 (NAILS FOR GYMS BOARDS).
L. ALL BEARING WALLS IN 5–A CONSTRUCTION TO BE 5/8" F.C. 1 HR F.R. CONSTRUCTION.
M. WHEN THE FOOTING OF THE STRUCTURE HAS UNCOATED, CONDUCTIVE STEEL REINFORCING BARS MEASURING A MINIMUM OF ½" DIAMETER AND 20 OR MORE FEET IN LENGTH, IT IS REQUIRED TO BE BONDED TO THE GROUNDING ELECTRODE SYSTEM IN NEW CONSTRUCTION IF ENCASED IN NOT LESS THAN 2" OF CONCRETE.
N. THE GENERAL CONTRACTOR AND THE ELECTRICAL CONTRACTOR SHALL COMPLY WITH THE ELECTRICAL SUB CODE, NEC 1999, SECTION 250–50 (C). A CONSTRUCTION PERMIT UNDER THE ELECTRICAL SUB CODE IS REQUIRED FOR THE BONDING CLAMP OR OTHER MEANS OF CONNECTION PRIOR TO ITS INSTALLATION. A LISTED CLAMP CONNECTS THE REBAR TO THE CONDUCTOR AS PER NEC 1999, SECTION 250–66 (B)
O. OWNER MUST SUBMIT THE FOLLOWING: SOIL BEARING CAPACITY REPORT FINAL SURVEY
P. EGRESS WINDOWS TO COMPLY WITH MINIMUM OPENING REQUIREMENTS; CLEAR OPENING AREA OF 5.7 SQ. FT.

EXISTING BRICK WALL
EXISTING INTERIOR FRAME WALL

RJWA
Robie J. Wood, Architect
704 Center Street
Garwood, NJ 07027
(908) 591-8543
robie@rjwoodarchitects.com
Robie J. Wood, AIA
NJ LIC.# 17678

PROJECT NAME
38-40 BROAD STREET
KEYPORT, NJ 07735

PROJECT DESCRIPTION:
INTERIOR ALTERATION OF THIRD FLOOR; EXISTING SINGLE APARTMENT TO BE SUBDIVIDED INTO TWO APARTMENTS

OWNER INFORMATION
IVAN MARTINEZ
38-40 BROAD STREET
KEYPORT, NJ 07735

NO.	DESCRIPTION	DATE
	ISSUED FOR VARIANCE APPLICATION	3/26/25

DRAWING TITLE
PROPOSED THIRD FLOOR PLAN

Seal

Date 03/26/2025
Project No. 25-008
Drawn by JG
Checked by HP,RW
DWG No.
A - 101.00
Scale AS INDICATED